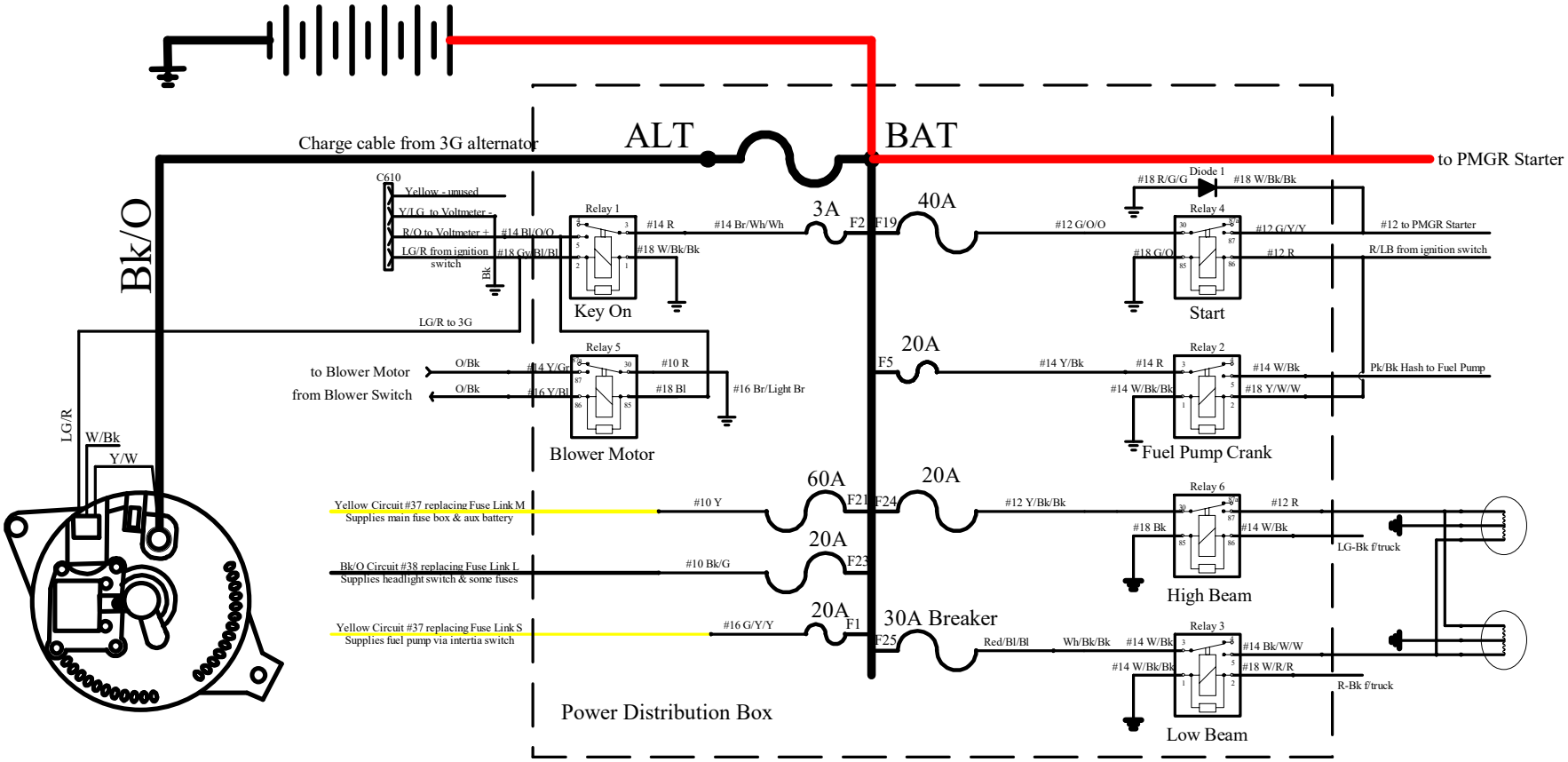
Charge cable from 3G alternator
ALT
BAT
to PMGR Starter
Bk/O
C610
Yellow - unused
Y/LG to Voltmeter -
R/O to Voltmeter +
LG/R from ignition switch
Bk
#14 Bl/O/O
#18 Gy/Bl/Bl
Relay 1
#14 R
#14 Br/Wh/Wh
#18 W/Bk/Bk
Key On
3A
F2
F19
40A
#12 G/O/O
Diode 1
#18 R/G/G
#18 W/Bk/Bk
Relay 4
#12 G/Y/Y
#12 R
#18 G/O
Start
#12 to PMGR Starter
R/LB from ignition switch
LG/R to 3G
Relay 5
to Blower Motor
from Blower Switch
O/Bk
#14 Y/Gr
#16 Y/Bl
#10 R
#18 Bl
#16 Br/Light Br
Blower Motor
F5
20A
#14 Y/Bk
Relay 2
#14 R
#14 W/Bk
#14 W/Bk/Bk
#18 Y/W/W
Pk/Bk Hash to Fuel Pump
Fuel Pump Crank
LG/R
W/Bk
Y/W
Yellow Circuit #37 replacing Fuse Link M
Supplies main fuse box & aux battery
#10 Y
60A
F21
F24
20A
#12 Y/Bk/Bk
Relay 6
#12 R
#18 Bk
#14 W/Bk
LG-Bk f'truck
High Beam
Bk/O Circuit #38 replacing Fuse Link L
Supplies headlight switch & some fuses
#10 Bk/G
20A
F23
Yellow Circuit #37 replacing Fuse Link S
Supplies fuel pump via intertia switch
#16 G/Y/Y
20A
F1
F25
30A Breaker
Red/Bl/Bl
Wh/Bk/Bk
#14 W/Bk
#14 W/Bk/Bk
Relay 3
#14 Bk/W/W
#18 W/R/R
R-Bk f'truck
Low Beam
Power Distribution Box