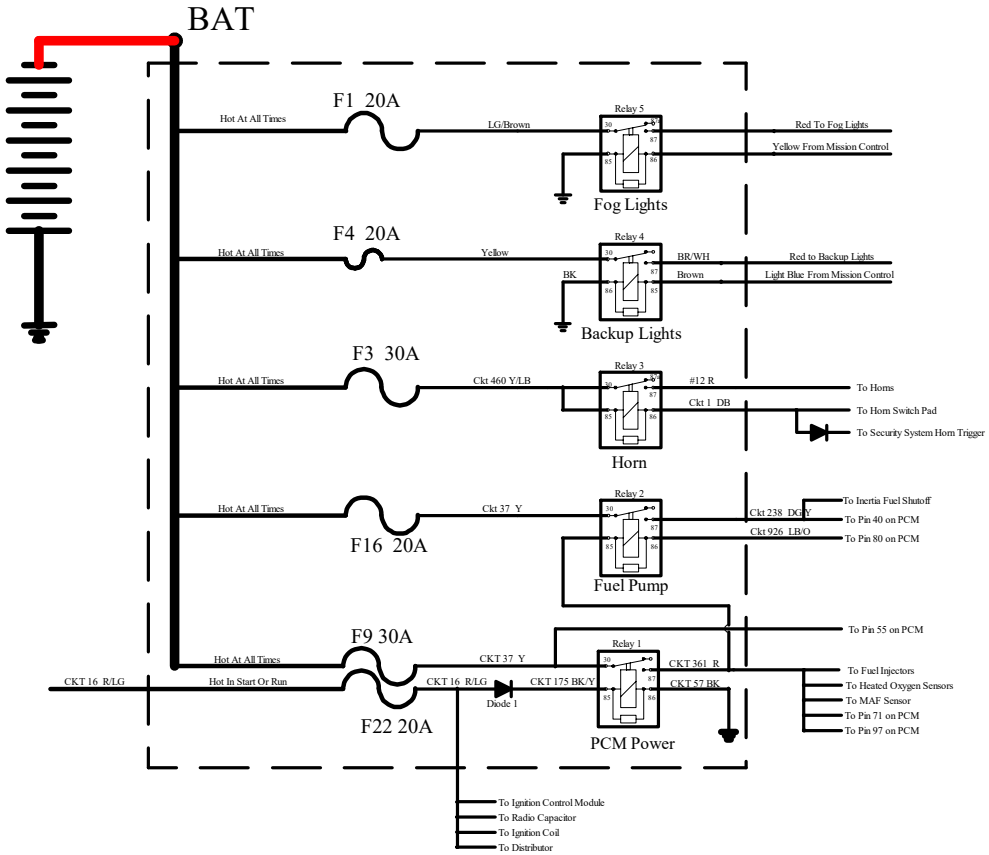
BAT
F1 20A
Hot At All Times
LG/Brown
Relay 5
Red To Fog Lights
Yellow From Mission Control
Fog Lights
F4 20A
Hot At All Times
Yellow
Relay 4
BR/WH
Red to Backup Lights
BK
Brown
Light Blue From Mission Control
Backup Lights
F3 30A
Hot At All Times
Ckt 460 Y/LB
Relay 3
#12 R
To Horns
Ckt 1 DB
To Horn Switch Pad
To Security System Horn Trigger
Horn
Hot At All Times
Ckt 37 Y
Relay 2
Ckt 238 DG/Y
To Inertia Fuel Shutoff
To Pin 40 on PCM
Ckt 926 LB/O
To Pin 80 on PCM
F16 20A
Fuel Pump
To Pin 55 on PCM
F9 30A
Hot At All Times
CKT 37 Y
Relay 1
CKT 361 R
To Fuel Injectors
To Heated Oxygen Sensors
To MAF Sensor
To Pin 71 on PCM
To Pin 97 on PCM
CKT 16 R/LG
Hot In Start Or Run
CKT 16 R/LG
Diode 1
CKT 175 BK/Y
CKT 57 BK
F22 20A
PCM Power
To Ignition Control Module
To Radio Capacitor
To Ignition Coil
To Distributor